Embrace the Technology®
CircuitSolver®
A ThermOmegaTech® brand

All components are NSF/ANSI/ CAN 61 or 372 certified.

CircuitSolver® Union Assembly and Uponor ProPEX® Adapters (CSUA-PX)

[Thermostatic balancing valve with integrated union body, ball valves and ProPEX Ends]

SUBMITTAL

JOB:	**ORDER NO:**	**DATE:**
	SUBMITTED BY:	**DATE:**
UNIT TAG:	**APPROVED BY:**	**DATE:**
CITY:	**ENGINEER:**	**BUILDING TYPE:**
STATE:	**CONTRACTOR:**	**CONSTRUCTION TYPE:**
COMPLETION DATE:		

DESCRIPTION

The CircuitSolver® Union Assembly's primary component is the CircuitSolver® which is a self-acting thermostatic recirculation valve that automatically and continuously maintains a set temperature at the end of each branch or riser in a domestic hot water system. Since the CircuitSolver® responds to water temperature and controls flow to the return, it eliminates the need to manually balance the system.

DIMENSIONS

Item No.	Part Number	Description	Qty
1	258-20X100-XXX	½" CIRCUITSOLVER THERMOSTATIC BALANCING VALVE WITH INTEGRATED UNION	1
2	92-160	BALL VALVE, ½" MxF, LF	2
3	92-116	ADAPTER, ½" NPT x ½" ProPEX	2

*ALL COMPONENTS ARE LEAD FREE

Item No.	Part Number	Description	Qty
1	258-30X100-XXX	¾" CIRCUITSOLVER THERMOSTATIC BALANCING VALVE WITH INTEGRATED UNION	1
2	92-158	BALL VALVE, ¾" MxF, LF	2
3	92-093	ADAPTER, ¾" NPT x ¾" ProPEX	2

*ALL COMPONENTS ARE LEAD FREE

Item No.	Part Number	Description	Qty
1	258-40X100-XXX	1" CIRCUITSOLVER THERMOSTATIC BALANCING VALVE WITH INTEGRATED UNION	1
2	92-170	BALL VALVE, 1" MxF, LF	2
3	92-117	ADAPTER, 1" NPT x 1" ProPEX	2

*ALL COMPONENTS ARE LEAD FREE

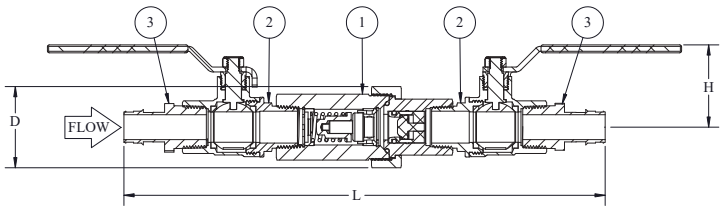

		Diameter (D)		Length (L)		Height (H)		Weight		C_v			Max. Pressure		Max. Temp.	
Model No.	NPT	IN	MM	IN	MM	IN	MM	LBS.	KG	OPEN	CLOSED	DESIGN	PSIG	BAR	°F	°C
CSUA-½-XXX-PX	1/2"	1.8	46	10.2	257	1.8	46	2.8	1.3	1.3	0.2	0.60	200	14	250	121
CSUA-½-XXX-CV1-PX																
CSUA-¾-XXX-PX	3/4"	2.0	51	11.8	300	2.0	51	3.9	1.8	1.8	0.2	0.85				
CSUA-¾-XXX-CV1-PX																
CSUA-1-XXX-PX	1"	2.5	64	14.3	363	2.3	59	6.2	2.8	2.5	0.2	1.57				
CSUA-1-XXX-CV1-PX																

Model Number Selection

XXX refers to the desired closing temperature. When the water temperature drops below this point the CircuitSolver® will begin to open, allowing water to easily enter the return line. For example, if you want 120°F desired return temperature and the CSUA-PX is to be installed on a 3/4" line, the model number would be CSUA-3/4-120-PX. To add optional check valve insert –CV1 directly after the temperature designation in the model number. Ex. CSUA-3/4-120-CV1-PX

ThermOmegaTech®
353 Ivyland Road, Warminster, PA 18974
1-877-379-8258 | CircuitSolver.com

CircuitSolver®
A ThermOmegaTech® brand

All components are NSF/ANSI/ CAN 61 or 372 certified.

MATERIALS

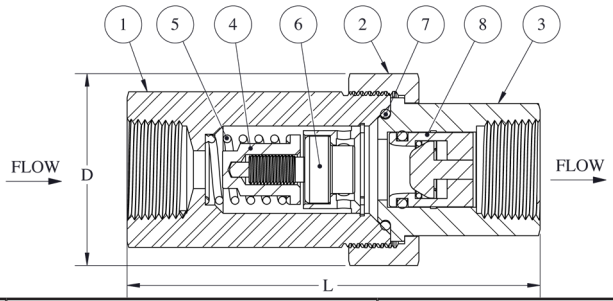

ITEM	DESCRIPTION	MATERIAL
1	Valve Body w/ Union Threads	300 series stainless steel
2	Union Nut	300 series stainless steel
3	Female Threaded Insert	300 series stainless steel
4	Plug	300 series stainless steel
5	Operating Spring	300 series stainless steel
6	Thermal Actuator	300 series stainless steel
7	O-ring	Buna-N
8	Check Valve (optional)	GLASS FILLED NORYL

FLOW RATE CALCULATION USING "Cv" FACTOR

$$GPM = C_v\sqrt{\Delta P} \qquad C_v = \frac{GPM}{\sqrt{\Delta P}} \qquad \Delta P = \left[\frac{GPM}{C_v}\right]^2$$

OPTIONAL CHECK VALVE

Features and Benefits
-100% factory tested drip tight operation
-Snap fit design, no retainer needed
-Extra-low head loss and low cracking pressure
-External O-ring in groove
Certifications
-ANSI/ NSF 61

ITEM	MATERIAL
Cap	Glass filled Noryl
Guide	Glass filled Noryl
Plunger	Glass filled Noryl
Lip Spring	EPDM rubber
Spring	Stainless Steel AISI 301
O-ring	EPDM rubber

OPTIONAL CHECK VALVE TECHNICAL DATA

Medium: Clear water only
Approximate Cracking Pressure: 0.29 PSI

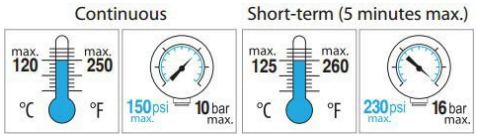

TYPICAL SPECIFICATION

I. Furnish and install CIRCUITSOLVER® UNION ASSEMBLY as indicated on the plans. CIRCUITSOLVER® UNION ASSEMBLY shall be self-contained and fully automatic without additional piping or control mechanisms. Thermostatic valve shall be a CIRCUITSOLVER® as manufactured by ThermOmegaTech®, Inc., or equivalent.
   A. CIRCUITSOLVER® shall regulate the flow of recirculated domestic hot water based on water temperature entering the CIRCUITSOLVER® UNION ASSEMBLY regardless of system operating pressure. As the water temperature increases the valve proportionally closes dynamically adjusting flow to meet the specified temperature.
      1. CIRCUITSOLVER® never fully closes, even at the desired set point. There is always sufficient bypass flow back to the recirculating pump to prevent overheating or "dead heading" of the pump.
      2. CIRCUITSOLVER® is set at the factory for the desired return temperature. No field adjustments needed. Several temperature set points are available.
      3. CIRCUITSOLVER® UNION ASSEMBLY shall be available in ½", ¾", & 1" with Uponor ProPEX® adapter fittings at both ends.

II. All components in the CIRCUITSOLVER® UNION ASSEMBLY are made with lead-free materials. The major components that make up the CIRCUITSOLVER® are constructed of type 300 series SS.
   A. CIRCUITSOLVER® UNION ASSEMBLY shall be rated to 200 PSIG maximum working pressure.
      1. CIRCUITSOLVER® UNION ASSEMBLY shall be standard tapered female pipe thread, NPT, with ProPEX adapters at both ends.
   B. CIRCUITSOLVER® UNION ASSEMBLY shall be rated to 250°F (121.1°C) maximum working temperature.
   C. CIRCUITSOLVER® UNION ASSEMBLY shall be NSF/ANSI/CAN 61 or 372 certified.
   D. Thermal actuator shall be spring-loaded and self-cleaning, delivering closing thrust sufficient to keep orifice opening free of scale deposits.

III. Installation of CIRCUITSOLVER® UNION ASSEMBLY shall be made by qualified tradesmen. Install CIRCUITSOLVER® UNION ASSEMBLY in each domestic hot water return piping branch beyond last hot water device in that branch.
   A. Provide suitable strainer as indicated in piping detail shown on the drawings.
   B. Provide suitable access panel as required in non-accessible ceilings and walls.
   C. Pay close attention to flow arrow, especially with valves that have an integrated check valve.

CircuitSolver®
A ThermOmegaTech® brand
353 Ivyland Road, Warminster, PA 18974
1-877-379-8258 | CircuitSolver.com